Wrocław University of Science and Technology

Sounding rocket experiment electronics design and tests

Aleksander Sil

January 30, 2019

Intermediate Project (Tuesday, 13:15)
Witold Paluszyński

Department of Cybernetics and Robotics, Faculty of Electronics
Wrocław University of Science and Technology

Abstract

The project focus on developing, assembling and testing of the electronic system of the sounding rocket experiment TRACZ. TRACZ is a project which is testing the application of soft robotic gripper - the jamming gripper - in space-like conditions. The gripper is mounted on a linear guide in the experiment's module. The guide allows the gripper to move towards the sample, 3D printed sphere, which is fixed to the top plate. The linear guide's actuated by a DC motor. The gripper itself is inflated and deflated with pressurized air with use of 2 solenoid valves.

1 Introduction

The jamming gripper is *a simple passive universal gripper, consisting of a mass of granular material encased in an elastic membrane. Using a combination of positive and negative pressure, the gripper can rapidly grip and release a wide range of objects that are typically challenging for universal grippers, such as flat objects, soft objects, or objects with complex geometries. The gripper passively conforms to the shape of a target object, then vacuumhardens to grip it rigidly, later utilizing positive pressure to reverse this transition—releasing the object and returning to a deformable state*[2].

This report presents the overview of the design and it's modifications during the last phase of the students' experiment project - TRACZ. It will focus on the electronic system. TRACZ is abbreviation for "**T**esting **R**obotic **A**pplications for **C**atching in **Z**ero-G". Project aims to test a jamming gripper in space-like environment. The idea is to perform three tests in the following conditions:

- Earth's gravity and air pressure
- Earth's gravity and vacuum
- Microgravity and vacuum

2 Experiment overview

The experiment will be conducted on the earth's surface and on board of the REXUS 26 rocket. This opportunity was granted by Swedish Space Corporation as a part of Rexus (Rocket and Balloon Experiments for University Students [1]) programme which is organised by the forementioned corporation, the German Space Agency (DLR) and the European Space Agency (ESA).

Results of the experiment will be compared to determine whether a jamming gripper is applicable in space missions. The figure below presents the general concept of the experiment.

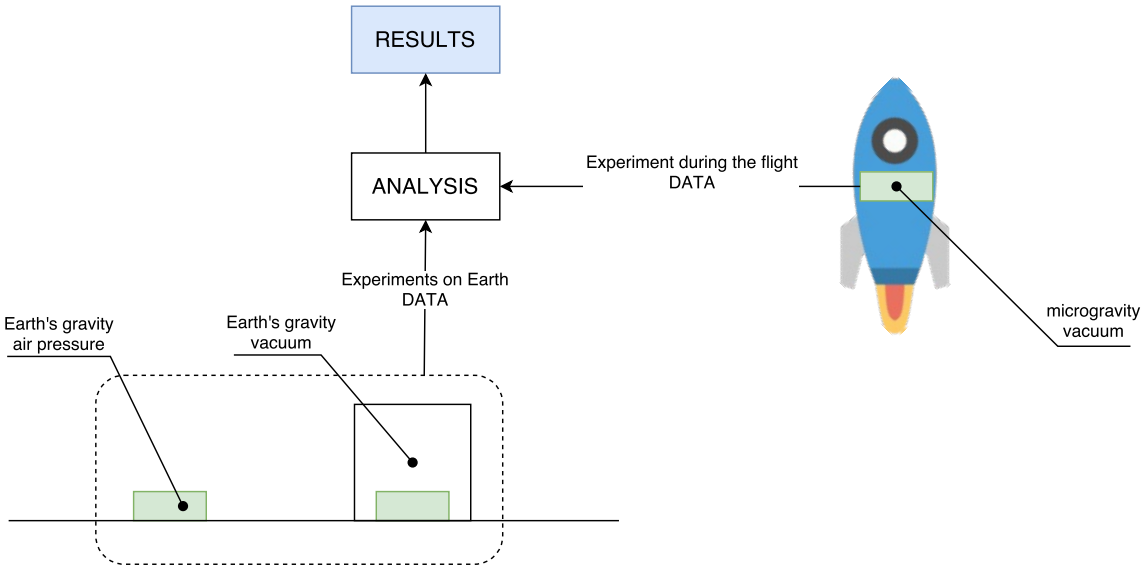

Figure 1: Experiment concept overview [4]

The gripping process schematic explanation can be seen on fig.2. Several grips of a single, fixed object will be performed. During each grip holding and pushing force shall be measured. Before a grip the jamming gripper shall be in the relaxed form which means all unnecessary air in the membrane should be blown out. Afterwards, the actuation system blows in a proper portion of air into the membrane to transit the granular material into unjammed phase. Then the jamming gripper moves closer to the sample and conforms to the object's shape. In the next step, the air inside the balloon is blown out and the granular

material transit into jammed phase, hardening it's state and catching the object. At the end the gripper releases the object and the procedure is repeated [4].

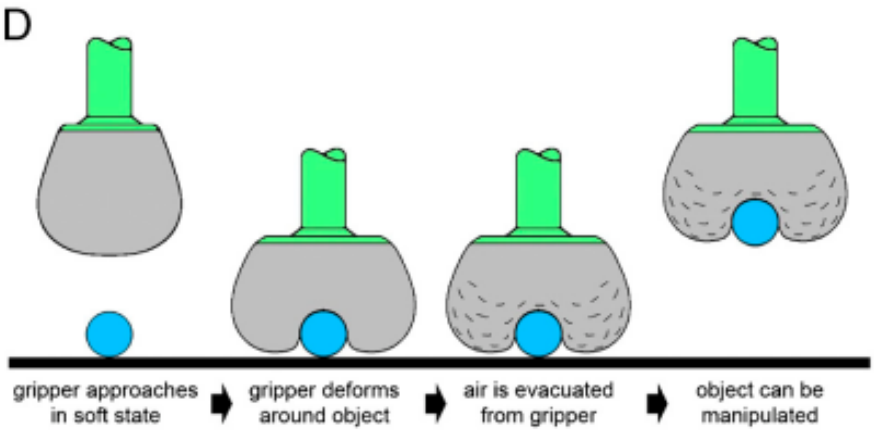

Figure 2: Operation of jamming gripper [3]

TRACZ's objectives are as follows:

Primary objectives

1. To design the jamming gripper able to perform a grip under vacuum and microgravity conditions
2. To perform multiple grasps of the sample
3. To evaluate the utility of the jamming gripper for space missions

Secondary objectives

1. To give the team members hands-on experience in working on aerospace projects
2. To observe deformation of the jamming gripper membrane during the gripping process

The final gripper differs from the original jamming gripper [2]. Old shape didn't allow for a grip with no negative pressure so it must have been changed. The new one (fig. 3) is able to do such grip. It resembles a more traditional gripper but it is still a soft gripper which uses the jamming of the granular material.

Assembled experiment's module is presented on figure 4. The experiment's module also includes:

Load cell Tensometric sensor measuring the pushing and pulling force of the gripper. The sample is fixed to this sensor.

Electric lock Locks the gripper in it's home position when the mechanism shouldn't move. This is the same component as used in the electrically locked storage cabinets

3 cameras These are placed around the sample

Figure 3: Final gripper shape

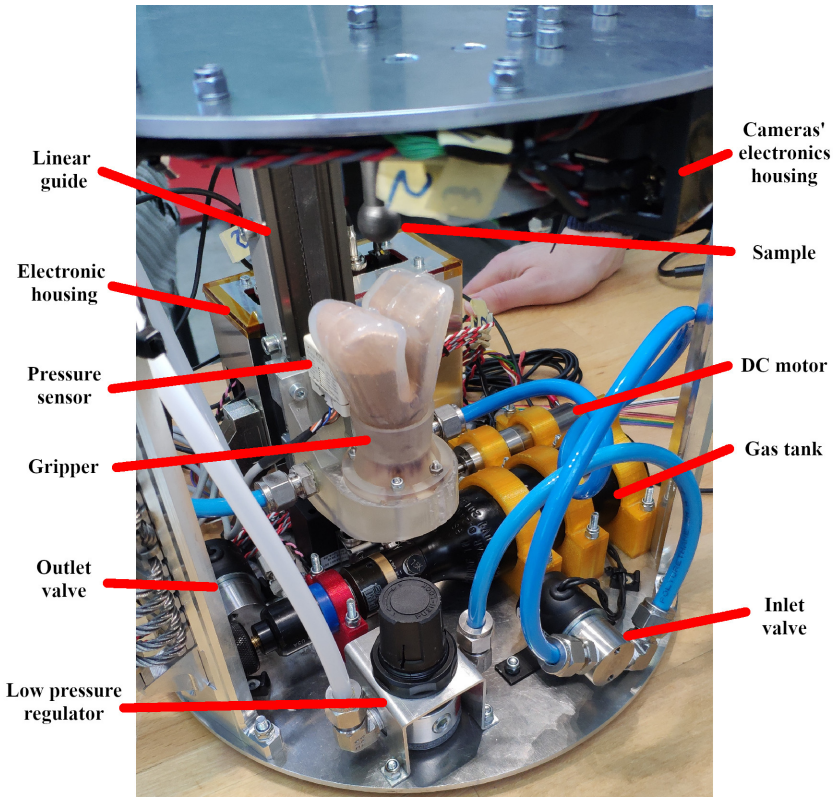

Figure 4: Experiment's module

3 Design

3.1 General

Electronic design of the TRACZ experiment is divided into 4 boards. Short function overview and diagrams of each board are presented below. The RXSM which is mentioned in the Powerboard diagram is the Rexus Service Module. This module is responsible for distributing power, signals to all experiments in the paylod, for handling rocket-to-ground communication and for managing the recovery and flight systems of the rocket.

Powerboard Power distribution

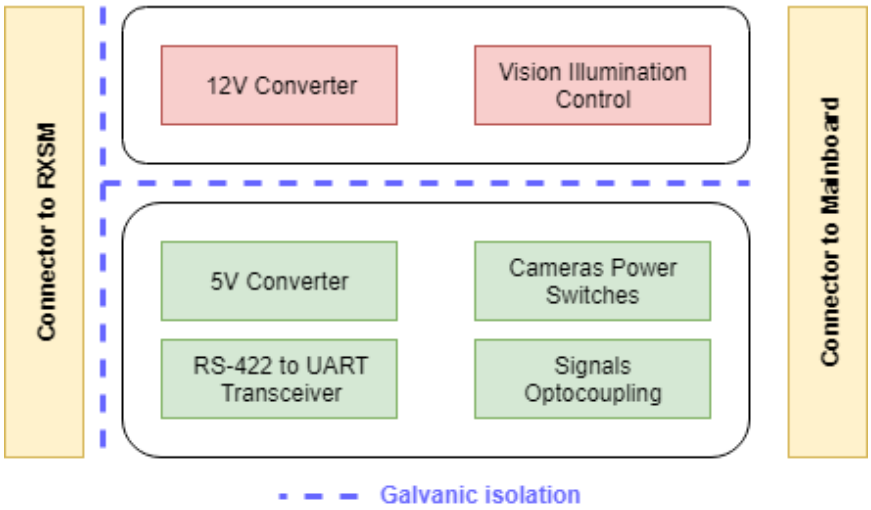

Figure 5: Powerboard diagram

Mainboard Main control unit, motor and valves control, crucial data handling and storage, signals distribution

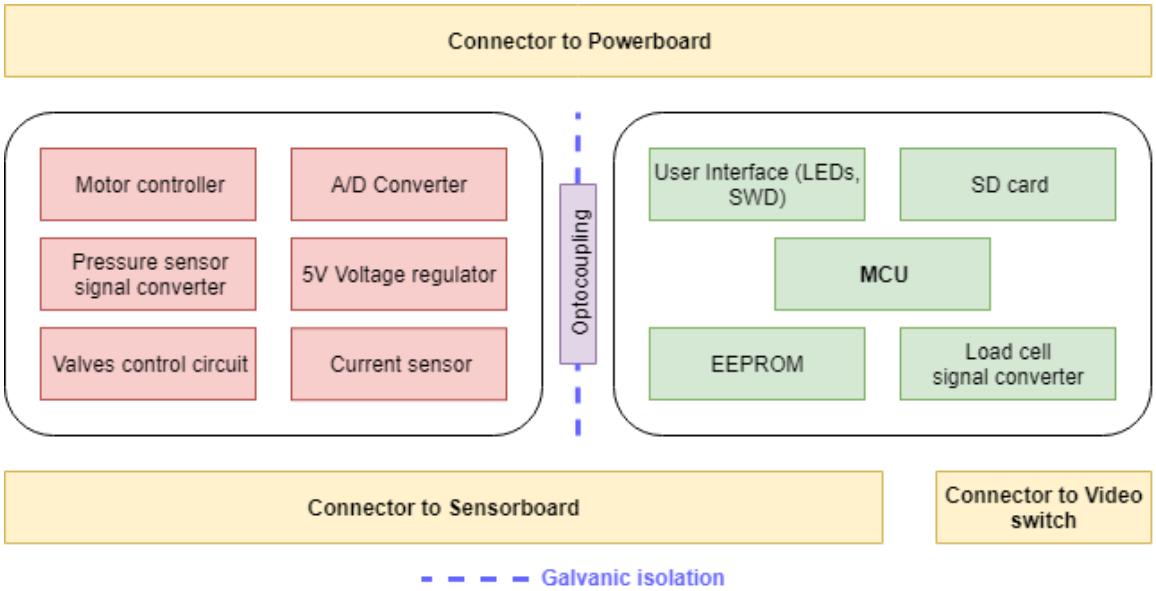

Figure 6: Mainboard diagram

Sensorboard Additional sensors data handling and storage, synchronizing the cameras, electric lock control

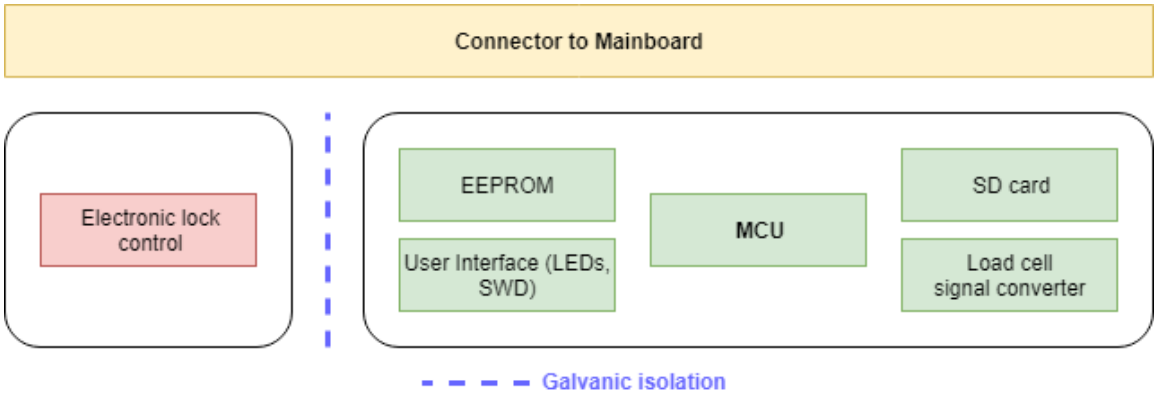

Figure 7: Sensorboard diagram

Video switch Allows to switch the active video channel

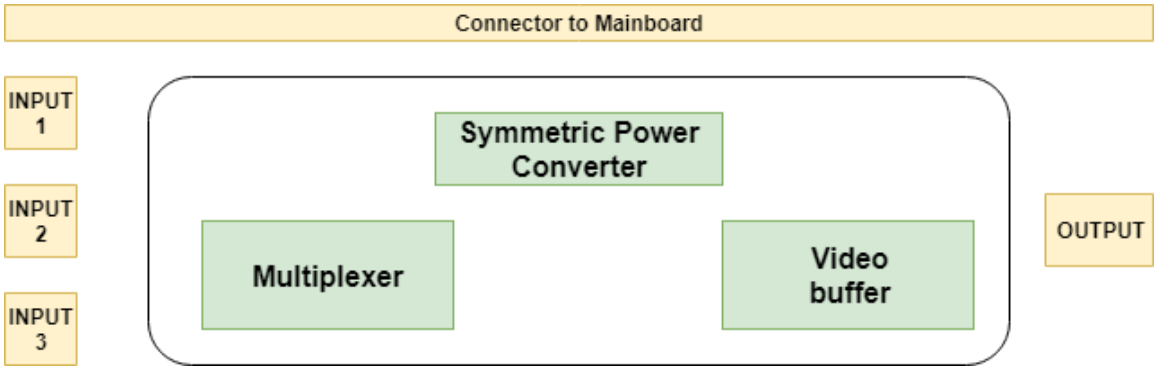

Figure 8: Video switch diagram

3.2 Video switch design

In the late phase of the project a need for more video channels emerged. In response, the video switch board was created. The design schematics can be seen in the figures below. The board is connected to the Mainboard which delivers two control signals to select one of the 3 video channels. AD8184ARZ multiplexer and AD8009ARZ video buffer are used to connect selected input to the output channel. The video output is connected to the Rexus Service Module (RXSM) video subsystem with coaxial cable.

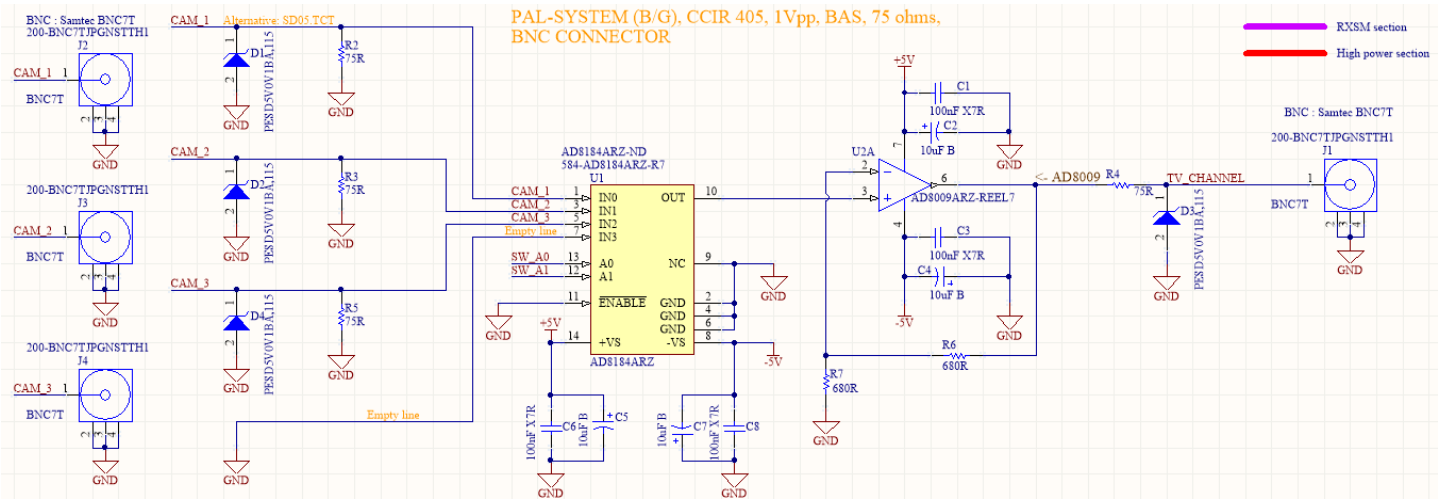

Figure 9: Video switch schematic [4]

In order to provide the smoothest power supply for the analog integrated circuits - the multiplexer and the buffer - the voltage provided by the mainboard is converted by additional converter. TPS65133 symmetrical DC/DC converter is used together with Pi filters (capacitor - inductor - capacitor) on intput and outputs.

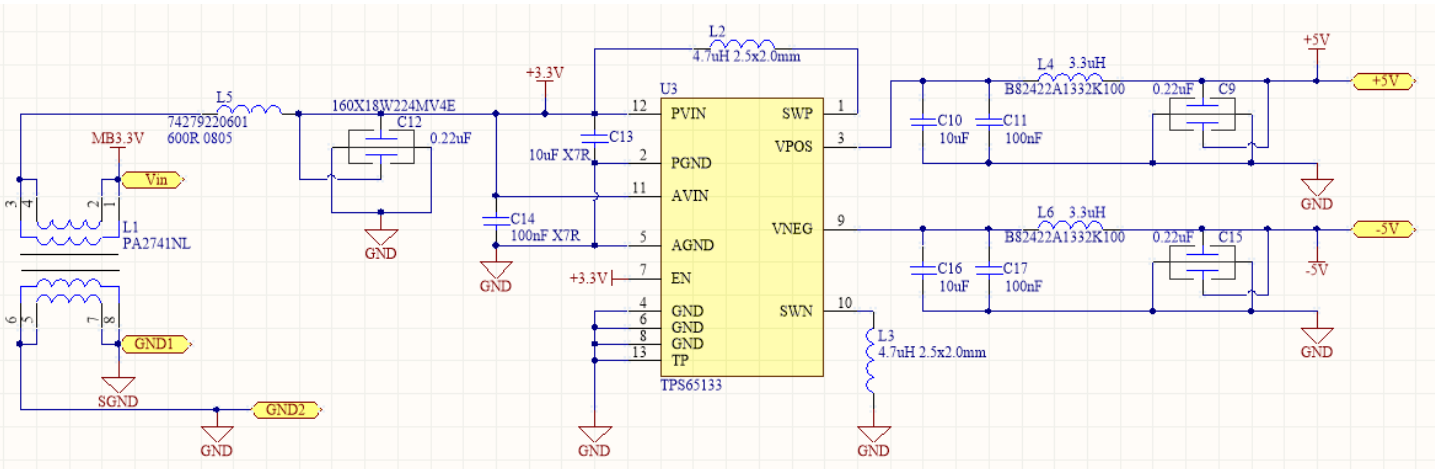

Figure 10: Video switch power supply [4]

This board was designed as 4 layers PCB, as opposed to the others. The reason for that is multilayer PCB is more suitable for analog video applications.

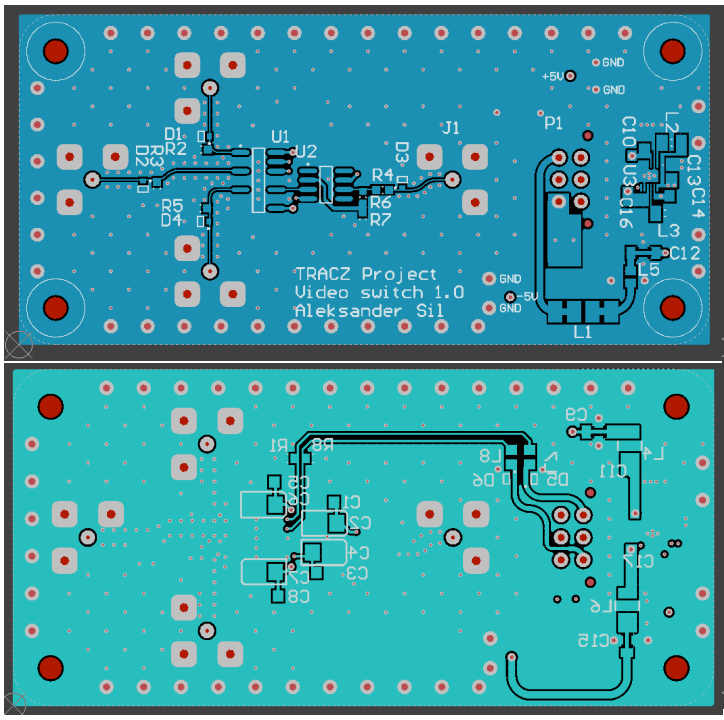

Figure 11: Video switch PCB top (upper) and bottom layers [4]

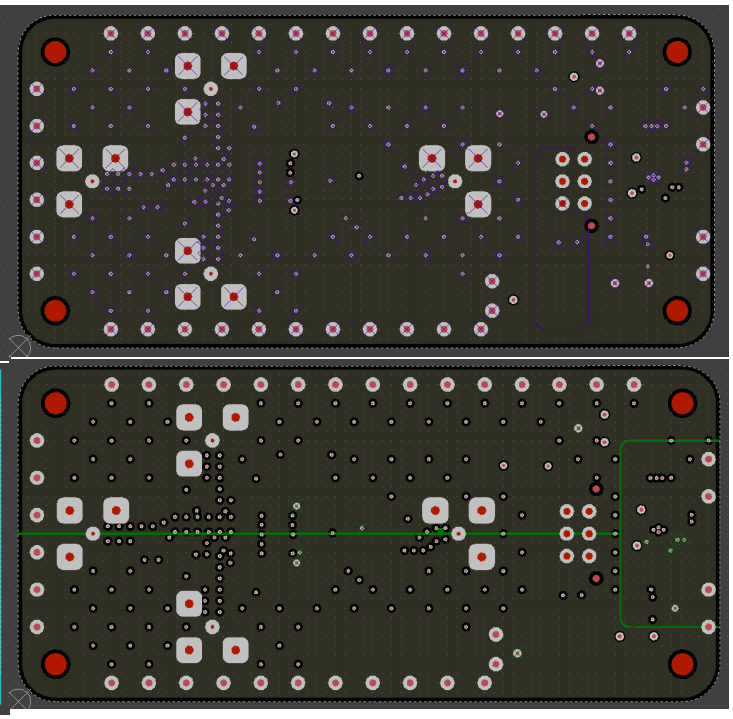

Figure 12: Video switch PCB internal ground (upper) and power layers [4]

3.3 Design changes

During functional tests of the experiment's module a design error was found. The circuit designed to convert the load cell output to $[0.00, 3.25]V$ voltage range signal was not working properly. The old schematic can be seen on figure 13.

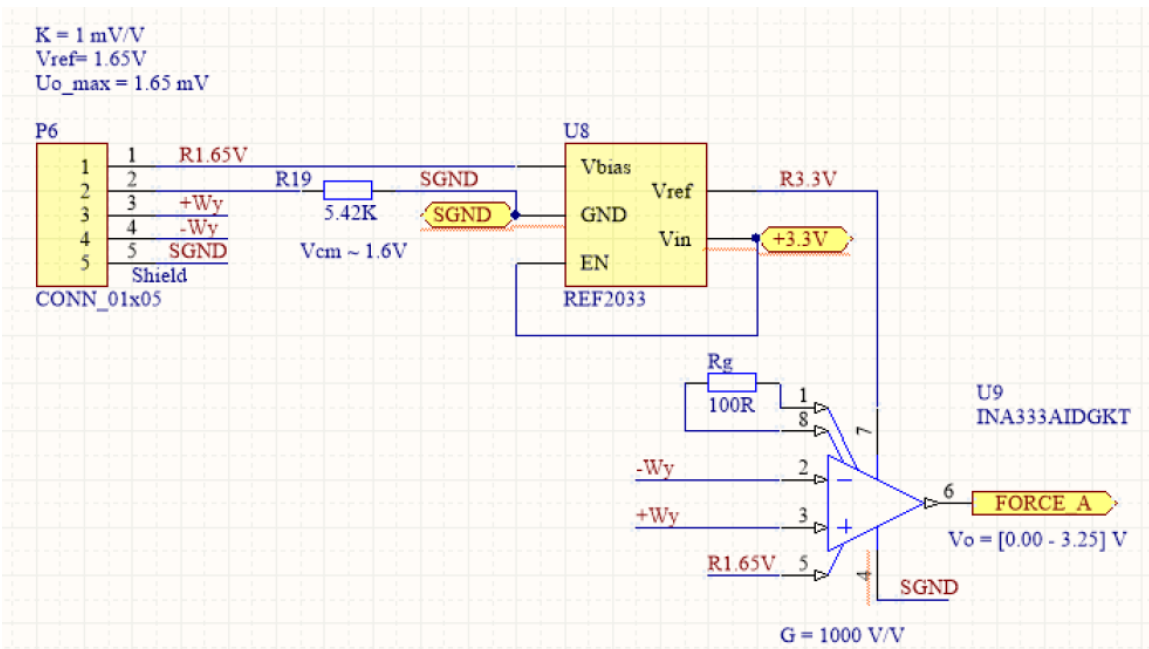

Figure 13: Old load cell signal converter circuit [4]

The problems with the old design were that load cell and instrumentation amplifier were powered from voltage reference integrated circuit (REF2033) and that the components' values were calculated for

different model of a load cell. First problem with this supply is that the excitation voltage (positive power supply) of the load cell was very low ($1.65V$) in respect to the nominal value ($10V$) which may have caused higher non-linearity of the measurements. The second problem was supplying the amplifier from $3.3V$ output of the voltage reference when the reference itself was powered from $3.3V$. The output had some drop-out which caused it to be slightly below $3.3V$ and this caused additional, linear error in the measurements.

Final boards of the TRACZ experiment features the new load cell signal converter circuit. The forementioned errors were corrected and additional filters on the output were used. New design allows for a load cell power supply voltage measurement which can be used to adjust the measurements values if the power supply voltage is other than expected.

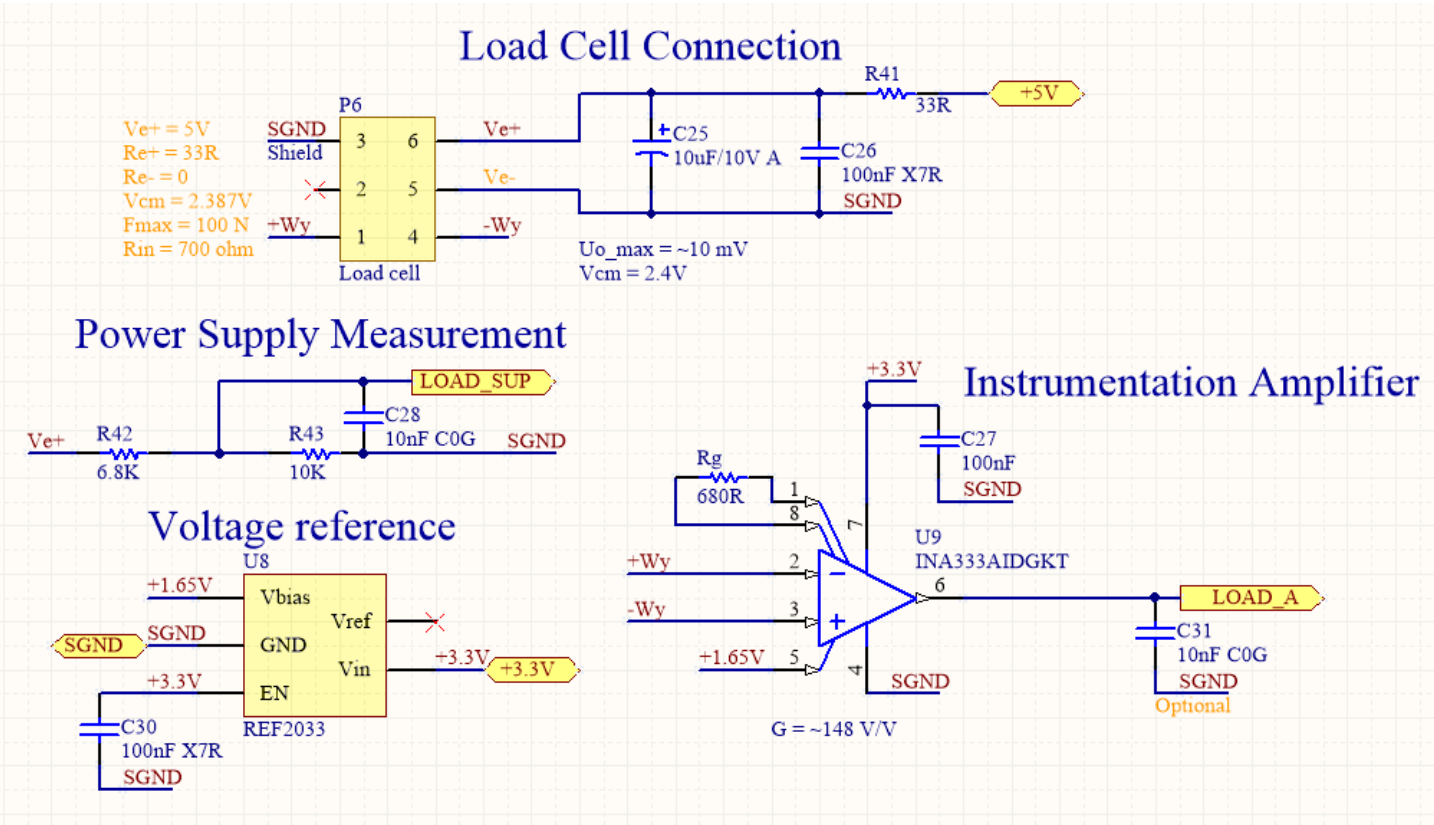

Figure 14: New load cell signal converter circuit [4]

4 Tests and measurements

4.1 Power system

The power system was tests were conducted under heavy load conditions. The 5V DC/DC converter output was connected to the $1R$ power resistor and then the external power supply was enabled.

The purpose of this test was to check if DC/DC converters can operate under heavy loads which in this case was around 83% of the maximum load of the converter. The converter heated up to $60°C$ and then it's temperature stabilized. The test was 30 minutes long and during this period the output parameters didn't change and the converter was still working properly. Nominal current during the experiment does not exceed 30% of the load so this result was acceptable.

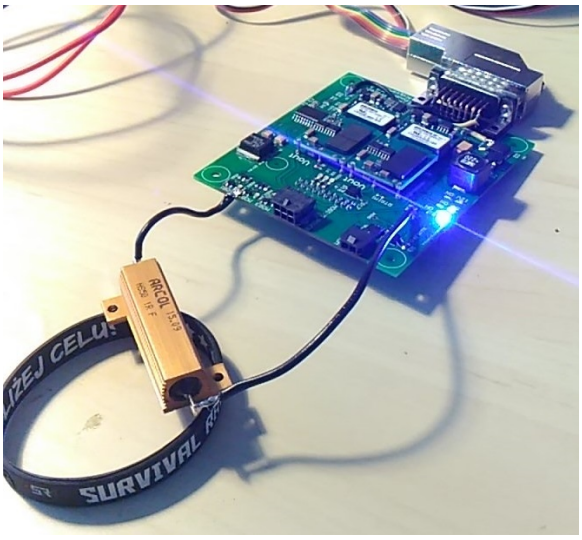

Figure 15: Stress test setup

Then the converter's output was short-circuited which caused it to reset continously. After this test the converter was still working properly. The overcurrent protection was verified.

The undervoltage lockout was tested by lowering the external supply voltage to under $18V$. Under this voltage the converter shutdown and was enabled again when the voltage was set to higher value.

After these tests the measurements of in-rush current, startup time and voltage ripple were made. The in-rush current was measured and was as low as $0.5A$. The converters started up after just 2 milliseconds. The voltage ripple on the $5V$ converter output was $70mV$ and $100mV$ for 12V converter. These values are were pretty high but acceptable.

4.2 Thermal vacuum test

Thermal vacuum test was conducted without the gas tank. The experiment's module was put into the vacuum chamber. The electronic system was enabled when the pressure dropped to $1.0 \cdot 10^{-}3mbar$. During the test, electronic system was moving the motor and was opening the valves despite the lack of gas flow. The temperature of the 5V DC/DC converter and the linear regulator were measured as they were expected to reach high temperatures. After 20 minutes the temperature on the DC/DC converter reached $81.0°C$ and $76.2°C$ on the linear regulator.

Temperature of the DC/DC converter was just below the limit which was alarming. The team decided that converters will survive the operation in space.

4.3 Power consumption measurement

Power consumption measurement was conducted on the flight-ready experiment's module. It was done by connecting external power supply to the module through improvised $0.1R$ high power resistor made out of 10 $1R$ resistors connected in parallel. Voltage drop on the resistor was measured and the current consumption could be calculated. The external voltage was supplied by laboratory power supply with voltage fixed at $28V$ (nominal RXSM voltage).

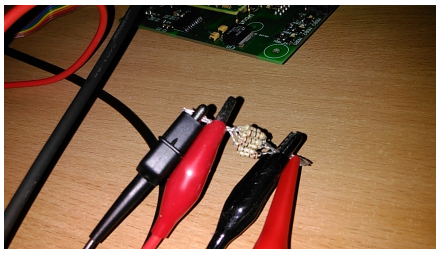

Figure 16: Improvised $0.1R$ resistor

The DC and AC voltage was measured on the resistor to cancel the AC noise in the measurements. This noise was pretty high as can be seen on the figure below.

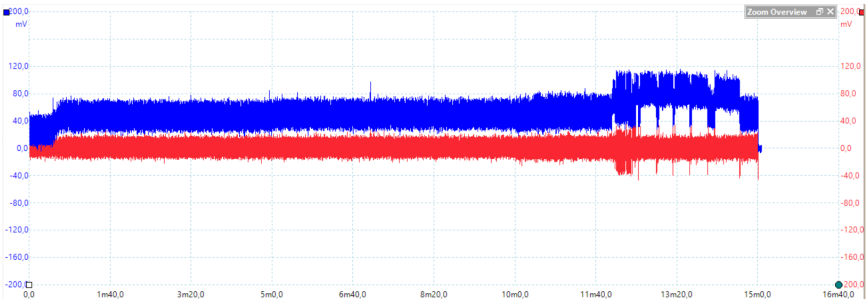

Figure 17: Voltage drop measurements (red - AC, blue - DC)

After the noise cancelation and applying the low-pass filter, quality results were obtained (figure 18). The total power consumption is around $4.66Wh$ with the mean power of $13.97W$ and the peak power of $23.80W$.

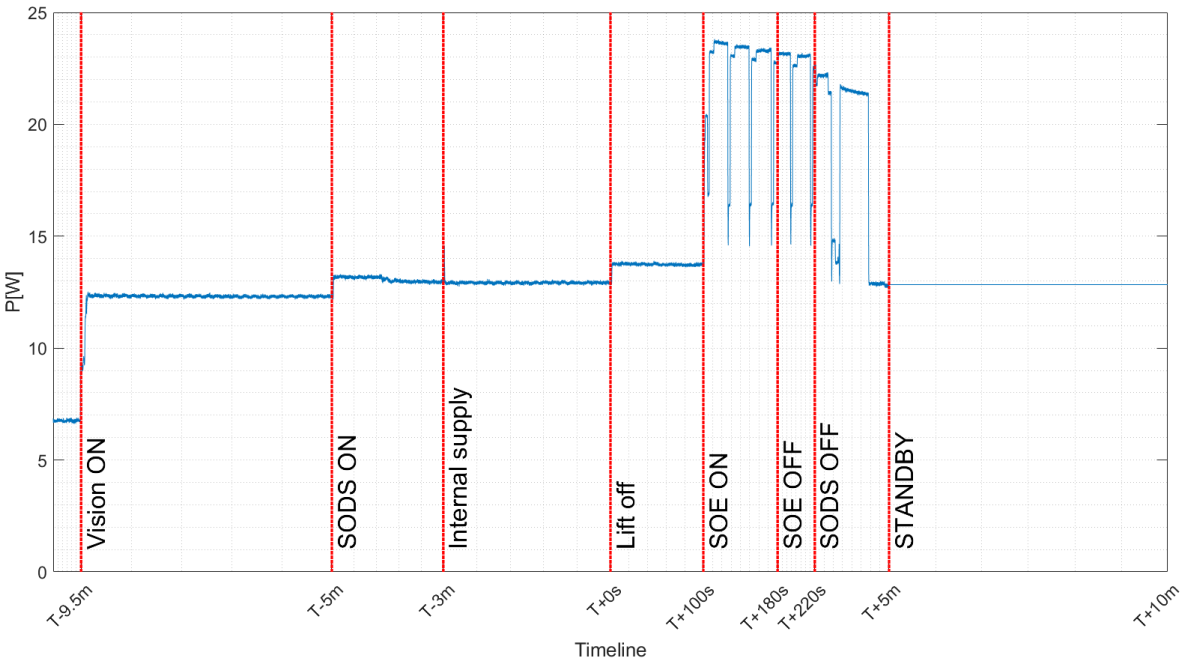

Figure 18: Power consumption plot [4]

5 Results

The design of electronic system was closed and the tests were conducted. The TRACZ experiment is ready for flight on-board the REXUS rocket and should operate nominaly. Major errors in the design were fixed and additional board was developed. Power consumption tests gave results that are much better than the initial assumptions and calculations. Power system is rigid and is not vulnerable to the noise coming from the external power supply.

References

[1] Rexus/bexus programme website. http://rexusbexus.net/.

[2] John R Amend, Eric Brown, Nicholas Rodenberg, Heinrich M Jaeger, and Hod Lipson. A positive pressure universal gripper based on the jamming of granular material. *IEEE Transactions on Robotics*, 28(2):341–350, 2012.

[3] Eric Brown, Nicholas Rodenberg, John Amend, Annan Mozeika, Erik Steltz, Mitchell R Zakin, Hod Lipson, and Heinrich M Jaeger. Universal robotic gripper based on the jamming of granular material. *Proceedings of the National Academy of Sciences*, 107(44):18809–18814, 2010.

[4] Aleksander Gorgolewski, Kamil Bęś, Aleksander Bojda, Łukasz Chojnacki, Adrianna Graja, Krystian Mirek, and Aleksander Sil. Student experiment documentation - team tracz. version 4-0, November 2018.