Keep your ideas safe and secure with this biometric diary locker

Ashutosh Chandan

February 3, 2019

Subject: Intermediate Project
Tutor: Phd Witold Paluszynski
Department: Electronics
Wroclaw University of Science and Technology

1 Abstract

The privacy is one of issue mankind facing in this modern era, most of us do not want someone else have access to our personal diary or smart-phone to avoid missuses, and this is the motivation behind making a bio-metric diary locker. The goal of this project is to make a bio-metric based diary locker, which open with your fingerprint data so no one else can open it. This device build on an open source platform Arduino and after implementing the codes in several tests, the device was successfully register the fingerprint of user then servo operates only when the bio-metric data matched with registered user hence unlocked.

1.1 Introduction

If you want to keep your personal thoughts and ideas to yourself, here's a diary locker that opens with your personal fingerprint. As you can in the picture below, This Arduino-based device can house a small notebook and even a smartphone, and locks with the press of a button. When you need your secured materials, you simply insert your finger into the fingerprint reader, and the small servo inside moves to allow access. An infrared sensor is also implemented to make sure the door is closed, and a series of programmable LEDs toward the bottom provide visible user feedback. The essential code and instructions are available below, and the needed 3D print files can be found on below or on Thingiverse.

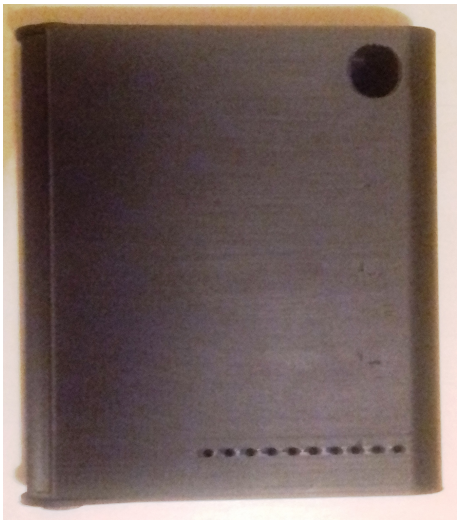

2 Step 1: Gather Materials

- Arduino Nano
- WS2812b Programmable LED x 10
- IN4001 Diode
- FPM10A Fingerprint Reader Sensor Module
- PCB Mount Tactile Switch Round
- Small SPDT Switch ON-Off Miniature Slide Toggle Switch
- USB Rechargeable Powerbank 2200ma
- SG90 Servo
- Infra Red LED Transmitter GL480
- Infra Red Phototransistor PT481F
- 1k and 2k2 Resistor
- Heatshrink
- Vero Board
- Hookup wire
- Epoxy Glue
- Hot Glue.

3 Step 2: 3D Print the Case

The case was printed on a Creality Ender 3 Printer using three separate prints.

- Base Unit
- Lid and
- Internal case components

The print files and instructions for printing can be found here on Thingiverse.

4 Step 3: Build and Test the Circuit

The Arduino Nano is programmed to communicate with a Servo and Fingerprint Sensor. The Fingerprint sensor is pre programmed with a library of Fingerprints that you want to be able to unlock the Diary Door. The door lock button is used to actuate the locking mechanism when the lid is closed. An infrared sensor is used to detect that the door is closed. I have used WS2182 LEDs which have a built-in IC which enables them to be addressed by the Arduino using three separate wires however a broad range of colors and brightness can be created by sending a command to the LED. This is done through a special library loaded into the Arduino IDE covered in the testing section.

4.1 Build and Test the Fingerprint Reader Circuit

Assemble the circuit on a Breadboard following the circuit diagram provided.

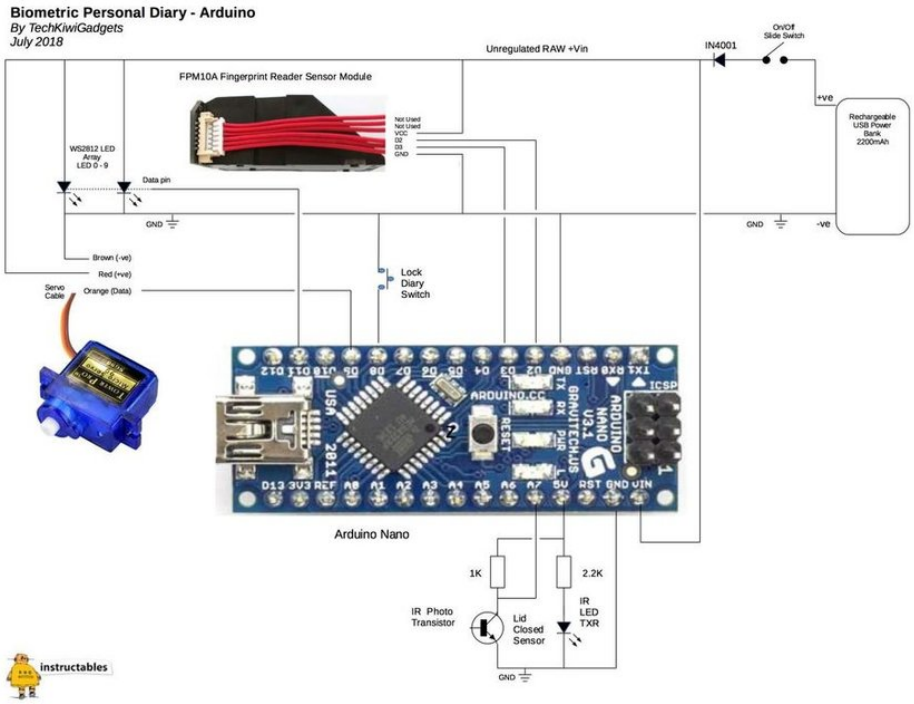

The following Libraries need to be downloaded and added to the Arduino IDE before loading the program into the Arduino Nano.

1.FastLED.h
2.AdafruitFingerprint.h

Load the AdafruitEnrollFingerprints.INO file and follow the prompts to enroll 10 new fingerprints in the first 10 locations. My advice is to use two separate fingers 5 times so that you can be sure of a reliable unlock of the unit.

5 Test the Unit

Load the BiometricPersonalDiary.INO file and load the code into the Arduino Nano. Test the door lock button is operating the locking mechanism when the infrared sensor is blocked simulating the lid being is closed. On power up the blue LED startup sequence occurs. The Servo should be stable and not be chattering after initial powerup. Once powered up, with the Infrared Sensor Blocked the green Light within the Finger Print Sensor should turn on. At this point, the unit is ready to read a fingerprint. Place your previously scanned and recorded finger on the sensor and hold until the LEDs indicate a reading has been completed. If the LEDs are red then the fingerprint is not recognized and the unit will try to continue to read. If the LEDs are green then the fingerprint has been recognized and you should see the Servo actuate.

5.1 Step 4: Assemble the Circuit and Base Mechanism

In this section, I will going to talk about Base Mechanism of electronics before assembling it.

5.2 Arduino Nano

Mount the Arduino Nano on a piece of Vero Board cut to size to fit into the base cavity as per the photos. Follow the circuit diagram and photographs to add the resister and power connections using hookup wire.

5.3 Finger Print Sensor

Using hookup wire and heat shrink carefully solder additional extension wires on the Finger Print Sensor to ensure the wires can reach the Arduino. Lay the wiring through the base holes neatly as per the photos. Position the Finger Print Sensor in the base unit as per the photos provided. Using hookup wire and heat shrink carefully solder additional extension wires on

the Finger Print Sensor to ensure the wires can reach the Arduino. Lay the wiring through the base holes neatly as per the photos. Position the Finger Print Sensor in the base unit as per the photos provided.

5.4 Infra Red Sensor

Follow the circuit to connect the IR Sensor and LED and ix them into the 3D printed LED sensor mount provided using hot glue. Route the wires to the Arduino to ensure they fit neatly into the base unit and can reach the Arduino. Check that the gap between the Infra Red LED and Sensor will fit the closed door tab provided in the 3D print as per the photos. This is used to break the beam when the Diary door is closed.

5.5 Servo Unit

Mount the Servo in the Servo Mount Bracket provided in the 3d Print. Carefully lay the cables inside the base so they can reach the Arduino. Using a paperclip attach the Servo Arm to the lock mechanism and position it in the base unit. Leave the Servo sitting in position so it can be aligned and fixed when final testing and assembly occurs.

5.6 Rechargeable Power Bank

Ensure the Powerbank you use will fit into the space provided and also enable access to the USB charging port of the Powerbank. Align the USB port to the front of the case and use a drill to create a suitable hole for charging purposes (See photo)

5.7 Switches

Connect the power and push button switches to hookup wire and use epoxy glue to fasten these into the holes provided in the base unit. Ensure the Arduino board and cables will fit into the cavity by neatly routing wires and trimming lengths before soldering onto the Vero Board.

5.8 Servo Lock Mechanism Alignment

Observe the position of the Servo in the video clip for the closure and opening of the door mechanism. Assemble the door mechanism and adjust the servo arm to ensure the door lock mechanism is not engaged. Place the door lock tab into the base unit to test the alignment of the locking mechanism. Power

on the unit and test that the Door Mechanism engages correctly and travels freely. The sensor unit has a guide that assists with ensuring the door lock mechanism does not jam. Once correct then hot glue the Servo and Sensor unit in place.

5.9 Mount the Door Lock and Door Closed Tabs

With the wiring neatly tucked away place the L shaped cover in place to obscure the Nano, Servo, and wiring. Once satisfied put the Door Lock Tab and the Door Closure Tab into the base unit holes and check the lock mechanism works to open and close. When aligned and tested put epoxy glue onto the tabs and then gently close the lid and leave for a few hours to dry. Finally test the operation of the unit before adding your Diary, Pen and other items you want secure from prying little fingers and hands.

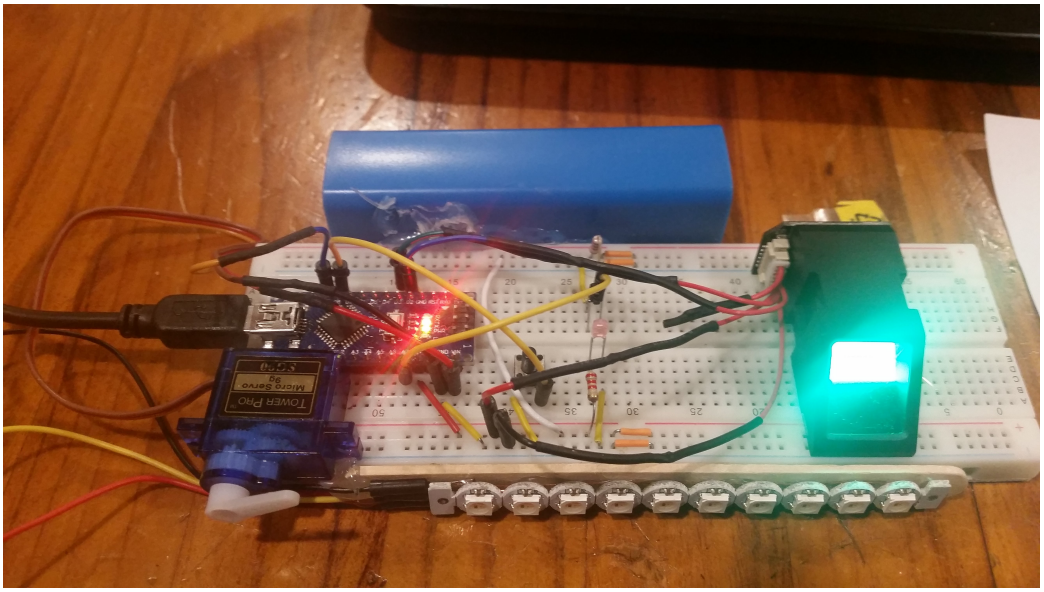

5.10 Final Testing and Result

Power on the unit using the switch and test the operation of the unit by placing your finger tip on finger print sensor. The device was successfully able to recognize the user finger print hence unlock. I enjoy the construction and use of this cool little gadget!!

6 References

- https://www.instructables.com/id/Biometric-Personal-Diary/
- https://www.thingiverse.com/thing:3063387
- https://blog.arduino.cc/2018/08/27/keep-your-ideas-safe-and-secure-with-this-biometric-diary-locker/

6.1 Declaration

The Device used libraries available from Arduino Open Source Community, this Open Source licence allow to use and redistribution of any part of the software provide that you mention the original author of it.